SECURICORP®
EXPERIENCE. EXPERTISE. EXECUTION

SCL-MDM02FFIR-WD22VDP

2.0 Megapixel WDR, Vandal-Resistant, Fixed IR Mini Dome Network Camera

Key Features

- Day/Night Functionality
- Smart IR, up to 30 m (98 ft) IR distance
- Up to 120 dB Optical WDR (Wide Dynamic Range)
- 3D DNR (Digital Noise Reduction)
- Triple streams
- ROI (Region of Interest)
- Customized OSD
- ONVIF Conformance
- Wide Temperature Range: -35°C to 60°C (-31°F to 140°F)
- Wide Input Voltage Range of ±25%
- IK10 Vandal Resistant
- IP66

Dimensions

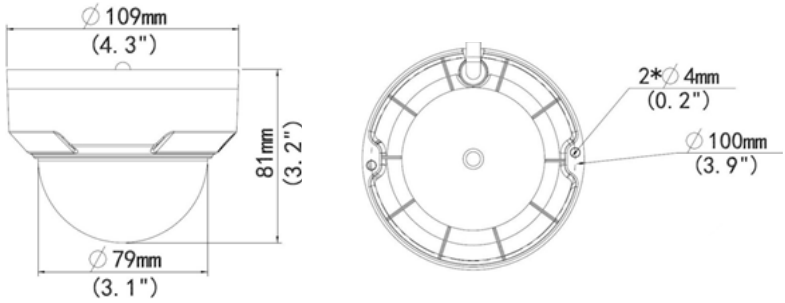

Installation

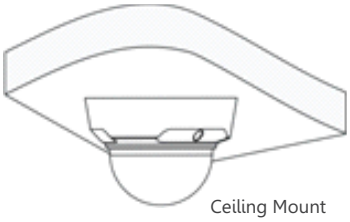

Technical Specification

Model	SCL-MDM02FFIR-WD22VDP
Product Name	2.0 Megapixel WDR, Vandal-Resistant, Fixed IR Mini Dome Network Camera
Camera	
Sensor	1/2.8", 2.0 Megapixel, Progressive Scan CMOS
Shutter	Auto/Manual, 1/6~1/8000 s
Lens	2.8 mm
Iris	F2.0
Day/Night	IR-cut filter with auto switch (ICR)
Min. Illumination	Colour: 0.02 Lux (F2.0, AGC ON) 0 Lux with IR
S/N	>52 dB
WDR	120 dB

Lumi Series

SECURICORP SYSTEMS LTD.
156-158 Buckingham Palace Road, London, SW1W 9TR, UK
Email: marketing@securicorp.com, www.securicorp.com

Securicorp Systems UK Ltd, All Rights Reserved. This document is for planning purposes only and is not intended to modify or supplement any specifications or warranties relating to product. Securicorp Systems UK Ltd may make changes to specifications and descriptions with out notice.

SECURICORP®
EXPERIENCE. EXPERTISE. EXECUTION

SCL-MDM02FFIR-WD22VDP

Video	
Max. Resolution	1920 × 1080
Video Compression	H.264, MJPEG
Frame Rate	1080P (1920*1080): MAX. 30 fps; 720P (1280*720): MAX. 30 fps
9:16 Corridor Mode	Supported
ROI	Supported
Video Streaming Available	Triple
OSD	Up to 8 OSDs
Privacy Mask	Supported
Audio	
Audio Compression	G.711
Two-way audio	Supported
Storage	
Edge Storage	Micro SD, up to 128 GB
Network	
Protocols	L2TP, IPv4, IGMP, ICMP, ARP, TCP, UDP, DHCP, PPPoE, RTP, RTSP, Qos, NTP, FTP, HTTP, SNMP, SIP
Security	User Access Log, Password Protection, HTTPS Encryption, RTSP Authentication, ARP Binding, IP Address Filtering, Video Watermark, IEEE 802.1x
Compatible Integration	ONVIF, API
Interface	
Audio I/O	Input: impedance 35 k Ω; amplitude 2 V [p-p] Output: impedance 600 Ω; amplitude 2 V [p-p]
Alarm I/O	1/ 1
Network	10M/100M Base-TX Ethernet
General	
Power	12 V DC, or PoE (IEEE802.3 af) Power consumption: 3.5W(5.5W with IR on)
Dimensions (Ø x H)	Φ109 x 81 mm (Ø4.3″ x 3.2″)
Weight	0.45 kg (0.99 lb)
Working Environment	-35° C ~ +60° C (-31° F ~ 140° F), Humidity ≤ 90% RH(non-condensing)
Vandal Resistant	IK10
Ingress Protection	IP66

Lumi Series

SECURICORP SYSTEMS LTD.
156-158 Buckingham Palace Road, London, SW1W 9TR, UK
Email: marketing@securicorp.com, www.securicorp.com

Securicorp Systems UK Ltd, All Rights Reserved. This document is for planning purposes only and is not intended to modify or supplement any specifications or warranties relating to product. Securicorp Systems UK Ltd may make changes to specifications and descriptions with out notice.