SECURICORP®
EXPERIENCE. EXPERTISE. EXECUTION

SCL-MDM02FFIR-PV21D

2.0 Megapixel Vandal-Resistant, Fixed, IR Mini Dome Network Camera

Key Features

- Day/Night Functionality
- Smart IR, up to 15 m (49 ft) IR distance
- 3D DNR (Digital Noise Reduction)
- Triple streams
- ROI (Region of Interest)
- Customized OSD
- ONVIF Conformance
- Wide temperature range: -35°C to 60°C (-31°F to 140°F)
- Wide voltage range of ±25%
- IK10 vandal resistant
- IP66

Dimensions

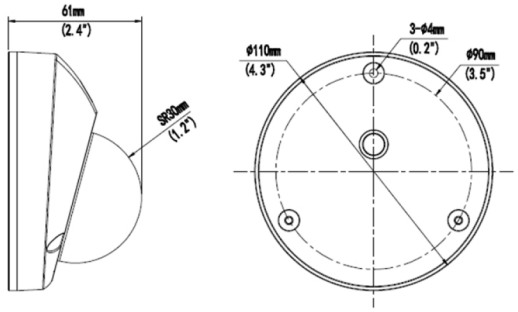

Installation

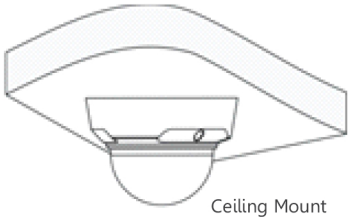

Ceiling Mount

Technical Specification

Model	SCL-MDM02FFIR-PV21D
Product Name	2.0 Megapixel Vandal-Resistant, Fixed, IR Mini Dome Network Camera
Camera	
Sensor	1/2.8", 2.0 Megapixel, Progressive Scan CMOS
Shutter	Auto/Manual, 1/6~1/8000 s
Lens	2.8mm
Angle of View (H)	115˚
Day/Night	IR-cut filter with auto switch (ICR)
Min. Illumination	Colour: 0.02 Lux (F2.0, AGC ON) 0 Lux with IR
S/N	≥52dB

LUMI SERIES

SECURICORP SYSTEMS LTD.
156-158 Buckingham Palace Road, London, SW1W 9TR, UK
Email: marketing@securicorp.com, www.securicorp.com

Securicorp Systems UK Ltd, All Rights Reserved. This document is for planning purposes only and is not intended to modify or supplement any specifications or warranties relating to product. Securicorp Systems UK Ltd may make changes to specifications and descriptions without notice.

SECURICORP®
EXPERIENCE. EXPERTISE. EXECUTION

SCL-MDM02FFIR-PV21D

Video	
Max. Resolution	1920 × 1080
Video Compression	H.264, MJPEG
Frame Rate	1080P (1920*1080): Max. 30 fps; 720P (1280*720): Max. 30 fps; D1 (720*576): Max. 25 fps
9:16 Corridor Mode	Supported
ROI	Supported
Video Streaming Available	Triple
OSD	Up to 8 OSDs
Privacy Mask	Up to 4 areas
Storage	
Edge Storage	Micro SD, Up to 128 GB
Network	
Protocols	L2TP, IPv4, IGMP, ICMP, ARP, TCP, UDP, DHCP, PPPoE, RTP, RTSP, DNS, DDNS, NTP, FTP, UPnP, HTTP, HTTPS, SMTP, SNMP, SIP, QoS
Security	User Access Log, Password Protection, HTTPS Encryption, RTSP Authentication, ARP Binding, IP Address Filtering, Video Watermark, IEEE 802.1x
Compatible Integration	ONVIF, API
Interface	
Audio I/O	Audio Cable Input: impedance 35 KΩ; amplitude 2 V [p-p] Output: impedance 600 Ω; amplitude 2 V [p-p]
Built-in Mic	Supported
Network	10M/100M Base-TX Ethernet
General	
Power	12 V DC ± 25%, PoE (IEEE 802.3af) Power consumption:3.5W (5.5W with IR on)
Dimensions (Ø x H)	Φ110 x 61 mm (Ø4.3″ x 2.4″)
Weight	0.25 kg (0.55 lb)
Working Environment	-35° C ~ +60° C (-31° F ~ 140° F), Humidity ≤ 90% RH(non-condensing)
Vandal Resistant	IK10
Ingress Protection	IP66

LUMI SERIES

SECURICORP SYSTEMS LTD.
156-158 Buckingham Palace Road, London, SW1W 9TR, UK
Email: marketing@securicorp.com, www.securicorp.com

Securicorp Systems UK Ltd, All Rights Reserved. This document is for planning purposes only and is not intended to modify or supplement any specifications or warranties relating to product. Securicorp Systems UK Ltd may make changes to specifications and descriptions without notice.